# PRELIMINARY PLAN (NOT FOR CONSTRUCTION)

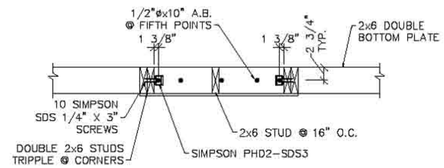


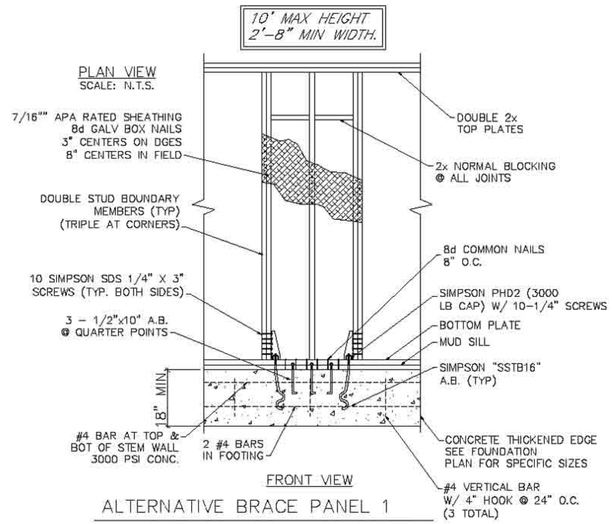


ALTERNATIVE BRACE PANEL 1

1ST STORY INSTALLATION

SCALE: N.T.S.

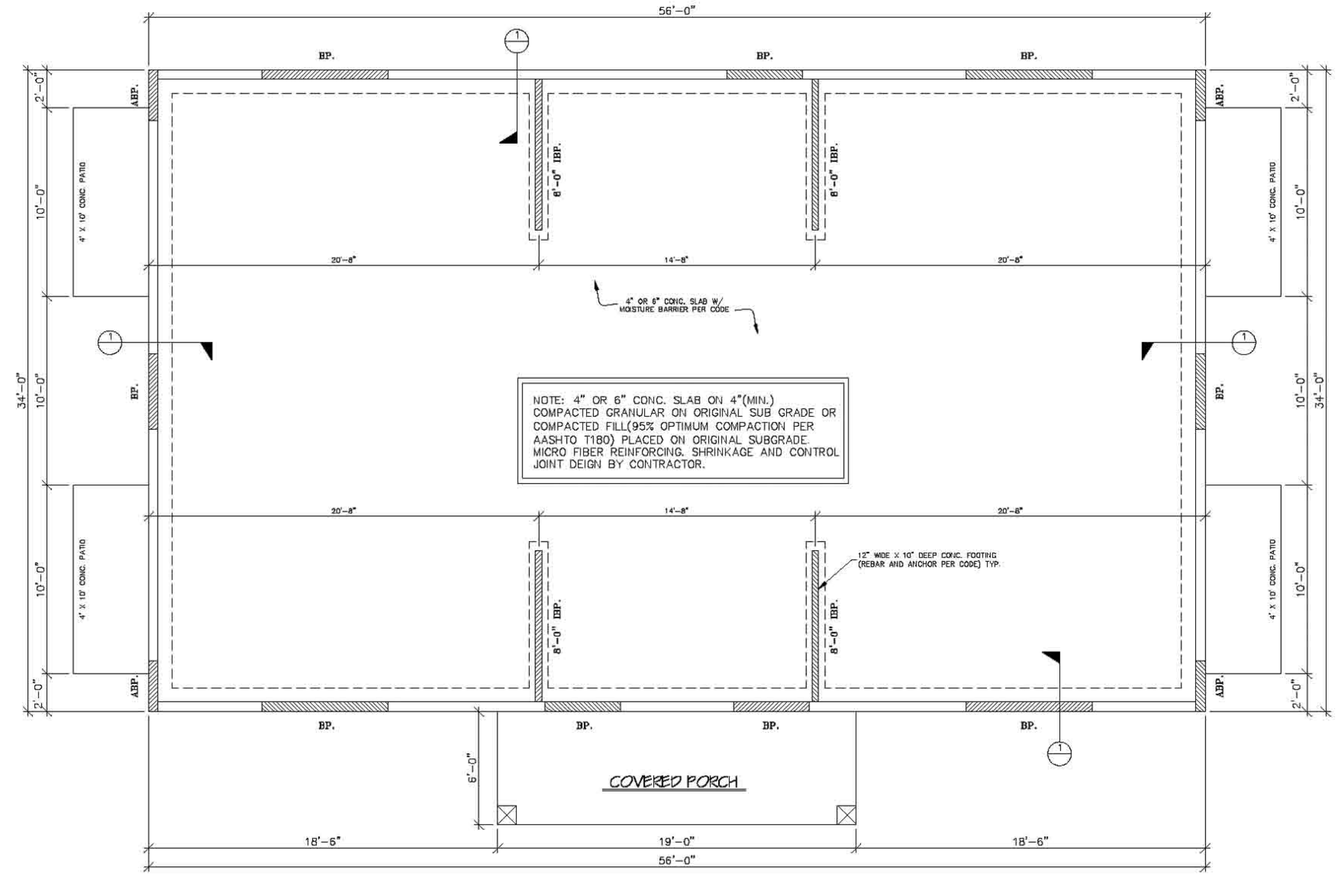


FOUNDATION PLAN SCALE: 1/4" = 1'-0"

## CONSTRUCTION SCHEDULE
## IBP
## (Interior Brace Panel)

NOTE: ATTACH TOP & BOTTOM PER CURRENT CODE.

* 8' minimum length for sheathing on one side.
  4' minimum length for sheathing on both sides.
* Meet code for size and spacing of studs and plates.
* Sill plate anchorage as follows: Pressure treated 2X with 1/2" Dia x 10" AB within 6" each end and on 6'-0" centers if over stemwall.
* Sole plate anchorage as follows: 2X plate fastened with 3-16d box nails at 16" centers max.
* Sheathing as follows: 1/2" Gypsum with 2X normal blocking at all joints. Use 1 1/4" drywall nails or screws. Place fasteners at 4" centers on edges and 8" centers in field.

## CONSTRUCTION SCHEDULE
## BP
## (Brace Panel)

NOTE: ATTACH TOP & BOTTOM PER CURRENT CODE.

* 4' minimum length
* Meet code for size and spacing of studs and plates.
* Sill plate anchorage as follows: Pressure treated 2X with 1/2" Dia x 10" AB within 6" each end and on 6'-0" centers if over stem wall.
* Sole plate anchorage as follows: 2X plate fastened with 3-16d box nails at 16" centers max.
* Sheathing as follows: 7/16" OSB APA rated sheathing with 2X normal blocking at all joints. Use 8d common nails or 8d galvanized box nails. Place fasteners at 3" centers on edges and 6" centers in field.

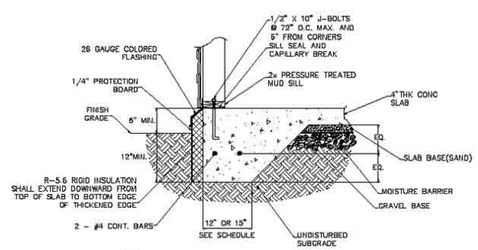


1 TYPICAL EDGE FOOTING
SCALE: N.T.S.

FOOTING WIDTH SCHEDULE
NO FLOOR LOADS (SINGLE STORY ONLY)

| TRUSS SPAN | FOOTING WIDTH |
|---|---|
| 0' TO 38' | 12" |
| 38' TO 44' | 15" |

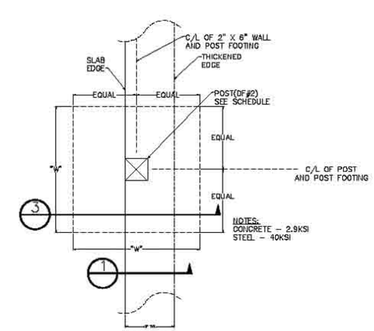


FOOTING SCHEDULE

| POST LOAD | POST SIZE | FOOTING "W" | DEPTH "D" | REINFORCING STEEL |
|---|---|---|---|---|
| 3,000 TO 6,000LB | 4" X 6" | 27" | 10" | 4-#4 BARS EACH WAY |
| 6,000 TO 8,000LB | 6" X 6" | 31" | 12" | 4-#4 BARS EACH WAY |
| 8,001 TO 9,100LB | 6" X 6" | 33" | 13" | 5-#4 BARS EACH WAY |
| 9,101 TO 10,500LB | 6" X 6" | 38" | 14" | 6-#4 BARS EACH WAY |

2 POINT LOAD FOOTING PLAN
SCALE: N.T.S.

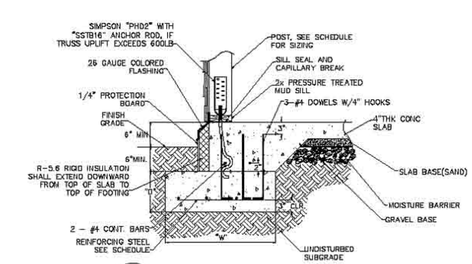


3 POINT LOAD FOOTING
SCALE: N.T.S.

CONTRACTOR IS RESPONSIBLE FOR
THE CORRECT DRAINAGE & WATERPROOFING SYSTEMS FOR
THE SLAB ON GRADE FOUNDATION SYSTEM

| REVISIONS | BY |
|---|---|
| | |

ELITE HOME DESIGN
BRAD EISELE
AUTHORIZED DESIGNER
PHONE: 503-999-4809

SENIOR HOUSING PROJECT


Tailor-Made Homes, LLC
877-TLR-MADE
Jeff@TLR-MADE.COM
503-999-4809


Tailor-Made CCB# 166487

DRAWN FOR:

DATE: 03-14-09

SCALE: 1/4" = 1'-0"

DRAWN: BRAD EISELE

JOB:

SHEET: 4

OF 4 SHEETS